

TECHNICAL DATA

Weight	Up to 132.3 lbs (60 kg) (config. with 4 × Grinders) 1 × Grinder = 8.8 lbs (4 kg)
Brew chamber	1 x 36 g
Grinder	Up to 4 × Grinders (Ø 64 mm steel burrs)
Display	1 × Touch screen 256 mm (10.1") - 1280 × 800 px
Bean hopper	Up to 4 x Bean hoppers 2 × 2.6 lbs | 2 × 1.3 lbs (2 × 1.2 kg | 2 × 0.6 kg)
Powder containers	2 × 2.2 lbs (1 kg) (option) (incompatible with the use of 4 grinders option)
Coffee outlet height*	Max. 7.9 in (200 mm)
Hot water outlet height*	7.5 in (190 mm)
Interfaces	1 × USB, 1 × Ethernet, 1 × CCI/CSI
Coffee boiler	20.3 fl oz (0.6 L)
Grounds drawer	400 g
Drip tray	Standard or Large (option)

* measured from the drip tray



14.5 in (368 mm)

OPERATING CONDITIONS

Operating Temperature	50 to 90 °F (10 to 32 °C)
Storage & transport temperature (empty boiler)	50 to 122 °F (10 to 50 °C)
Long term storage (> 6 months) (empty boiler)	41 to 122 °F (5 to 50 °C)
Relative Humidity (RH), no condensing (storage, transport and operating)	5 to 80 % RH
Transient over-voltage	Category II

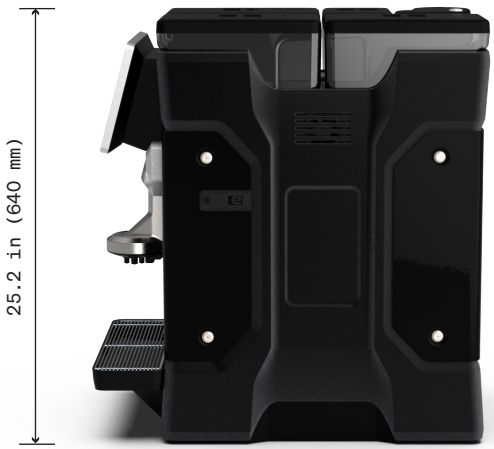

25.2 in (640 mm)

23.6 in (600 mm)

25.1 in (638 mm) with large drip tray

WATER REQUIREMENTS

Total hardness	5 to 8° dGH (89 to 142 ppm)
Carbonate hardness	Max. 6° dKH (107 ppm)
pH value	Ideal 7.0 to 7.2
Chlorine value	Max. 0.1 mg/L (0.1 ppm)
Inlet hose	Inox braided pipe G3/8" female x 2 m
Drain hose	Ø 22 mm x Ø 16 mm x 2 m
Siphon inlet	min. Ø 2.2" (56 mm)
Pressure	36.3 to 58 psi (2.5 to 4 bar). If the pressure exceeds 58 psi (4 bar), it is necessary to install a pressure reducer.
Flow rate	To avoid damage to the water pump, a water flow rate of at least 0.6 gal (US)/min (2.4 L/min) | 37 gal (US)/h (140 L/h) must be ensured at the water inlet of the machine.

CERTIFICATION INFORMATION

ANSI model name	L2-c-A(1) | L2-cm-A(1) | L2-cp-A(1) | L2-cmp-A(1)
Certificates	NSF c UL us LISTED E500866

© Eversys S.A. | SAP 5700120024-V2.1 - 27.10.2026 | techsupport@eversys.com | +41 27 588 00 17 | www.eversys.com

ELECTRICAL INFORMATION

Power consumption (standby mode)	Less than 2 W

LEGACY+ 10A

COUNTRY	ELECTRICAL VERSION	POWER SUPPLIES	L'2C	L'2M
North America	A3	2/PE, 208V~, 60Hz, 15A	1650 W	1650 W

PERFORMANCE (UP TO)	L'2C	L'2M
Single espresso / h (extraction time: 23 s)	150	150
Hot water / h (6.8 fl oz or 200 mL)	135	135
Powder products / h (6.8 fl oz or 200 mL)	135	135
Cappuccino / h (extraction time: 23 s)	-	130
Auto adjustable hot water temperature	Yes	Yes
Everfoam (e'Foam)	-	-
Milk system with EMT (Electronic Milk Texturing)	-	Yes

Coffee cannot be dispensed at the same time as hot water.

LEGACY+ 16A (POWER PLUS)

COUNTRY	ELECTRICAL VERSION	POWER SUPPLIES	L'2C	L'2M
North America	A2	1/N/PE, 110-120V~, 60Hz, 20A	1500 W	-
North America	A4	2/PE, 208/240V~, 60Hz, 20A	2500/3250 W	2500/3250 W

PERFORMANCE (UP TO)	L'2C	L'2M
Single espresso / h (extraction time: 23 s)	150	150
Hot water / h (6.8 fl oz or 200 mL)	160	160
Powder products / h (6.8 fl oz or 200 mL)	135	135
Cappuccino / h (extraction time: 23 s)	-	150
Auto adjustable hot water temperature	Yes	Yes
Everfoam (e'Foam)	-	-
Milk system with EMT (Electronic Milk Texturing)	-	Yes

Coffee cannot be dispensed at the same time as hot water.

© Eversys S.A. | SAP 5700120024-V2.1 - 27.10.2026 | techsupport@eversys.com | +41 27 588 00 17 | www.eversys.com

INSTALLATION REQUIREMENTS

IMPORTANCE OF THE SAFETY INSTRUCTIONS

In order to prevent accidents to persons, damage to equipment or pollution of the environment, you must comply with all the safety instructions in the manual and on the machine.
Observe the bylaws and the recognized technical rules which apply in the country of use of the machines.
It is imperative to read the Eversys General Safety Instructions (supplied with the machine) before carrying out any action on the machine. In case of unclear information, please contact your local service organization.

PREPARATORY WORK

- ☐ Have a flat and clean surface.
- ☐ Get a clean environment.
- ☐ Keep a space of min. 9.8 in (250 mm) above the machine.
- ☐ A stable support capable of supporting the weight of the machine plus an additional weight of 13.2 lbs (6 kg) including coffee beans, water, etc.
- ☐ Have a table height of at least 31.5 in (800 mm).
- ☐ Have a separate power lines for each machine.
- ☐ Have an electrical network protected by an RCD or RCCB.
- ☐ Water mains shutoff valve with a non-return valve (type EA or according to local regulation).
- ☐ Descaling cartridge or carbon filter as minimum.
- ☐ Install the machine with adequate backflow protection, in accordance with applicable federal, state or local plumbing codes.

INSTALLATION

Install the machine in accordance with the manufacturer's training and the information on the installation sheet supplied with the machine. Below you'll find a quick overview of how to connect the machine (drain, water and milk supply).

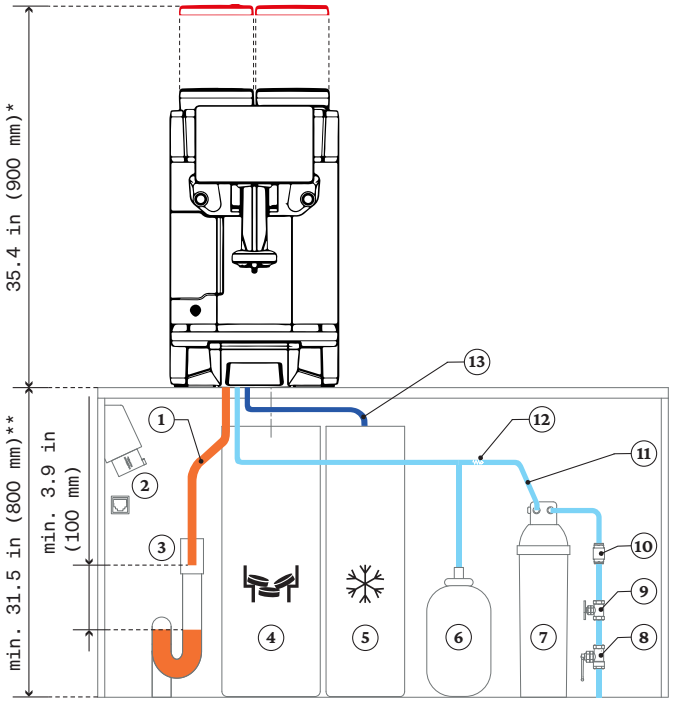

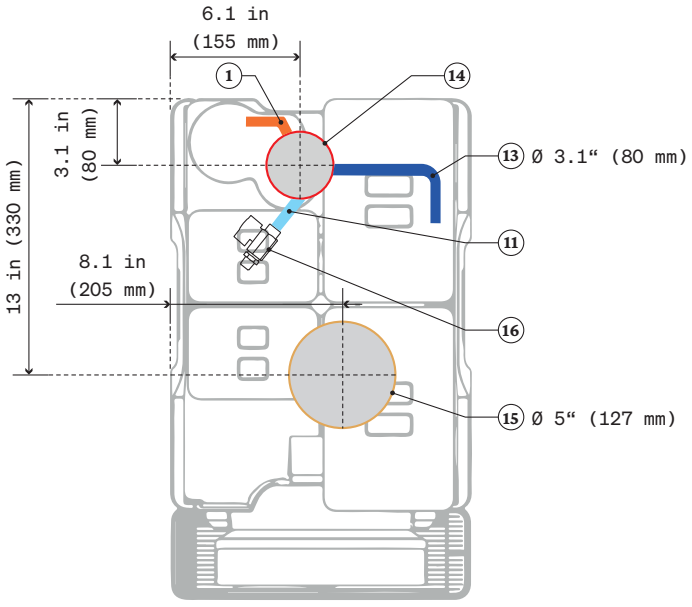

1. Drain hose – **Make sure that the drain hose outlet is placed on the siphon but not in contact with waste water. The hose must always flow downwards.**
2. Electrical socket according to local regulation and RJ-45 connection (e'Connect).
3. Drain with siphon, input min. Ø 2.2“ (56 mm). Execution according to EN 61770.
4. Undercounter grounds coffee disposal (option).
5. Fridge installed as close as possible to the machine (maximum 78.7 in (2 meters) hose length).
6. Pre-charged 2 bar expansion tank (option). In the event of a temporary drop in water pressure below 29 psi (2 bar).
7. Descaling cartridge or carbon filter as minimum.
8. Main water tap (required).
9. Pressure reducer (option). If water pressure exceeds 58 psi (4 bar).
10. Check valve according to local regulation.
11. Water supply hose G3/8“ female.
12. Check valve (option). If using an expansion tank (6).
13. Milk tubes cut as short as possible.
14. Countertop cutout for cables and hoses.
15. Countertop cutout for the undercounter ground coffee disposal (option)
16. Machine water inlet 3/8“.

*** Minimum height required to refill /remove bean hopper.**
**** Depending on machine setup, height could vary.**

AFTER INSTALLATION

Explain to staff how to use and clean the machine, using the quick-start guide and cleaning sheet supplied with the machine.

To start the Eversys warranty period, please follow the instructions at the end of the installation wizard, or connect the machine to telemetry for a fully automated warranty start.

Your local distributor:

© Eversys S.A. | SAP 5700120024-V2.1 - 27.10.2026 | techsupport@eversys.com | +41 27 588 00 17 | www.eversys.com